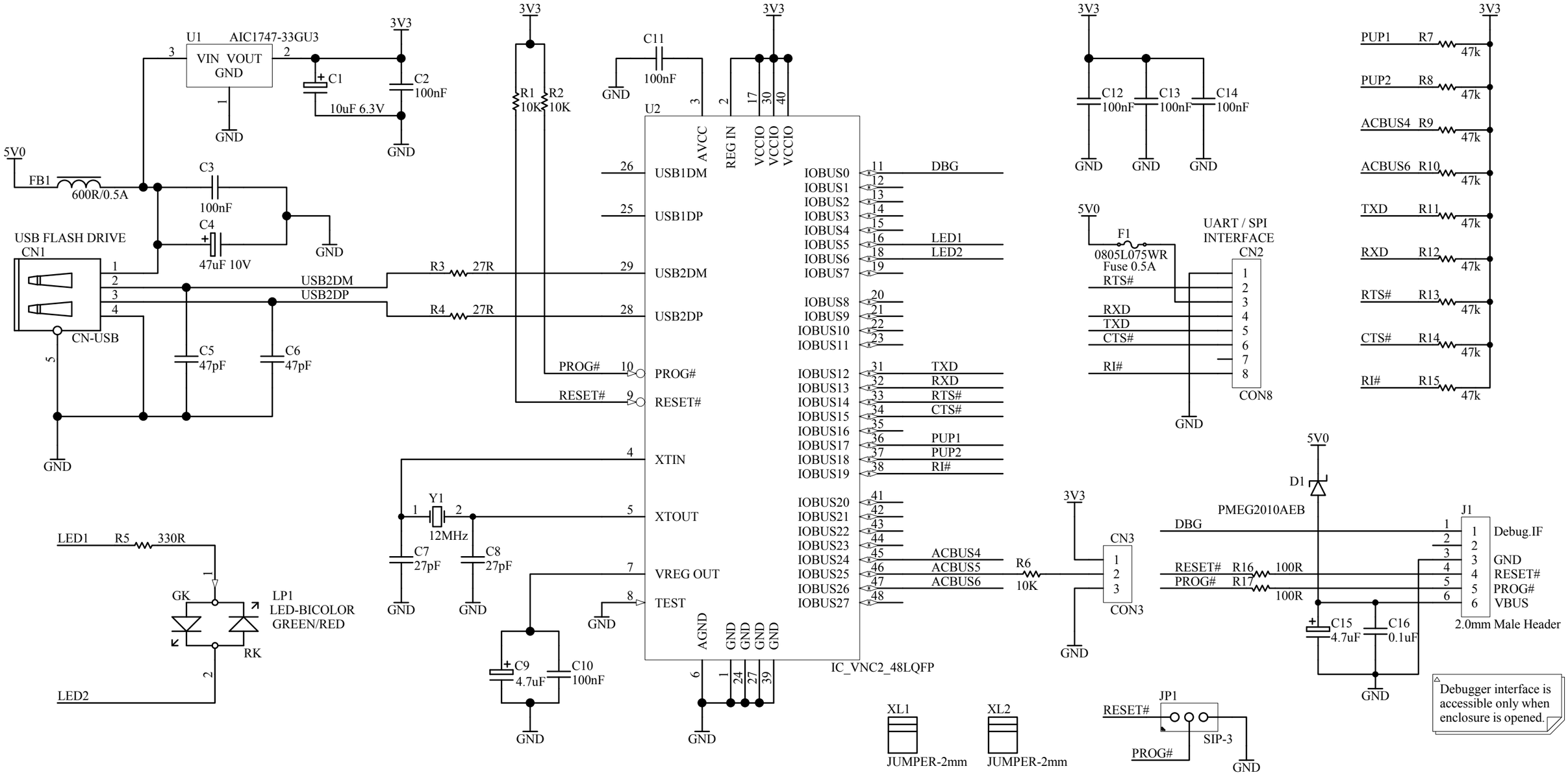

Title *VDRIVE3 Schematic*		**Future Technology Devices International**
Size: A4	Number: HW_214	Revision: 1.0	*Unit 1, 2 Seaward Place Centurion Business Park Glasgow G41 1HH*
Date: 24/05/2013	Time: 10:57:35	Sheet 1 of 1	
File: VDRIVE3.SchDoc			