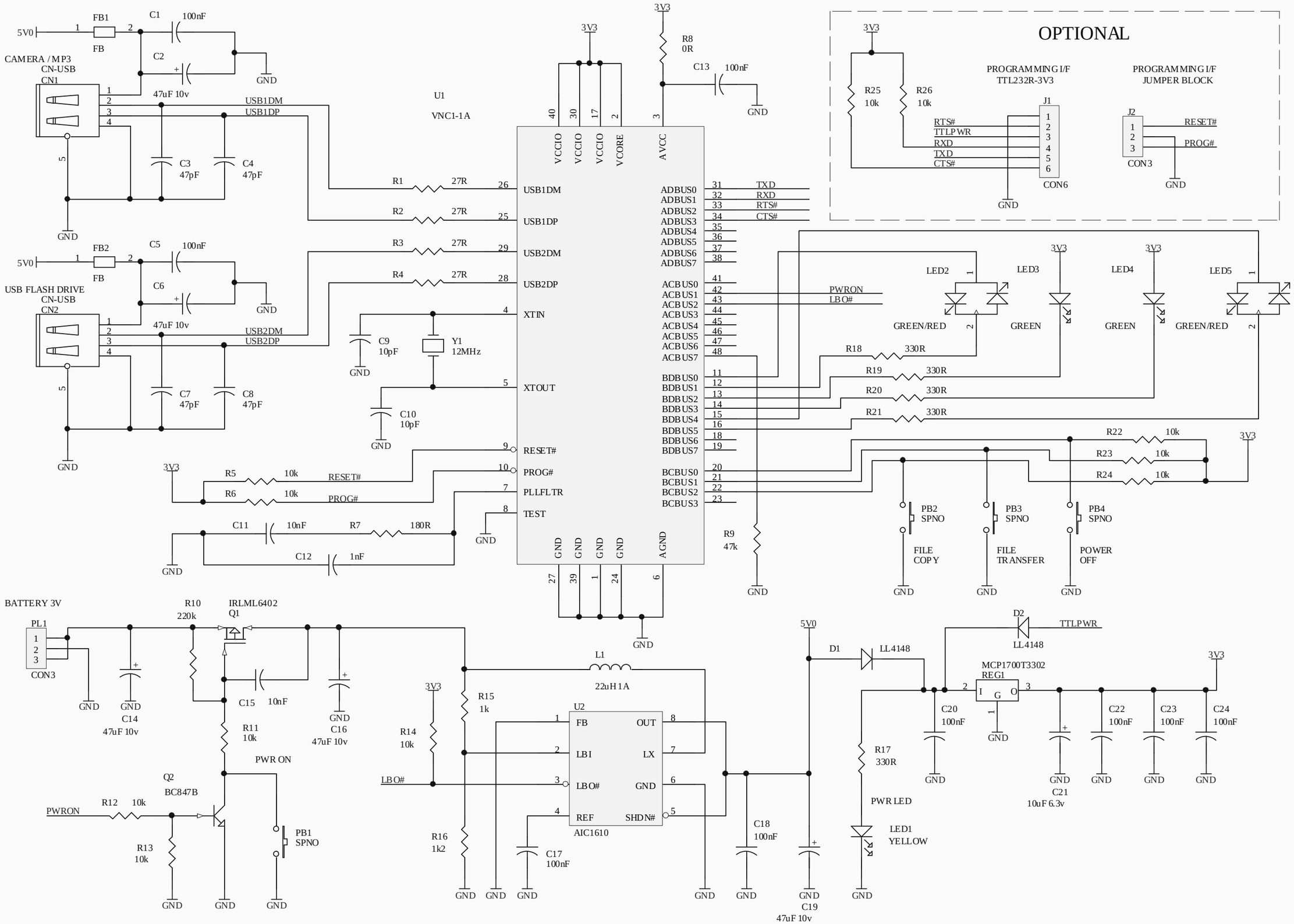


# VINCULUM BACKUP FOR DIGITAL CAMERA / MP3 TO USB FLASH DRIVE SCHEMATIC